Plymold

your source for furnishing solutions

INSTALLATION INSTRUCTION

PRODUCT :FLAT BENCHES
Z000000127

ATTENTION INSTALLERS: PLEASE PRESENT INSTALLATION DOCMENTS TO FACILITIES MANAGER.

REVISION: B
DATE: 9-5-02

STEP #1: GLIDE ASSEMBLY

1) Assemble a threaded glide to each of the legs.

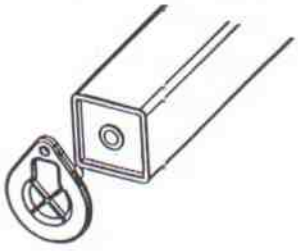

STEP #2: CONNECTING FRAME HALVES

1) Position frames on legs and align bolts holes in table angles. (see Fig. 1)
2) Fasten together using ¼"-20 x ¾" bolts and ¼"-20 nuts.
3) Level table angles and then tighten nuts.

Note *If tables wider than 24" are required, or if additional belly room is needed: Installed expansion spacer as shown See layout for additional information.*

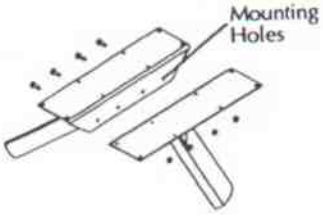

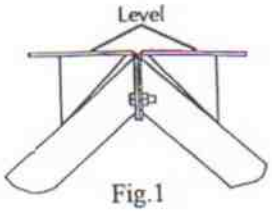

Fig.1

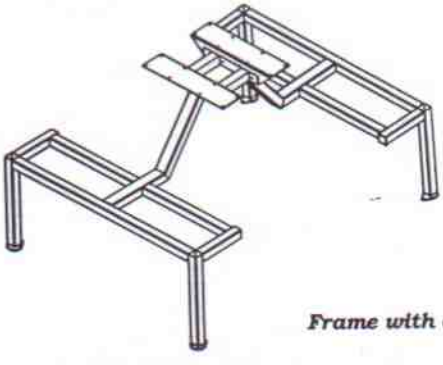

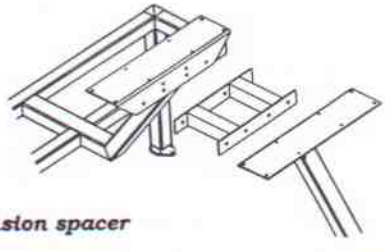

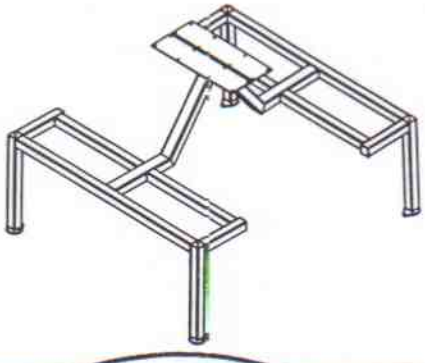

Frame with expansion spacer

STEP #3: ATTACHING SEATS TO FRAME

1) Locate seat fastening hardware. (flat bench rear hooks 4 per seat)
2) Place seat atop frame.(flat bench)
3) Center seat on frame. (right to left)
4) Insert short tongue of rear seat hook into seat plate. Using screwdriver snap hook to frame as shown. (See fig. 2) *Steps 5- pertain to contour seats only*
5) Position seat on end as shown. (fig 3)
6) Insert short tongue of front seat hook into seat plate.
7) Position seat over frame, tip front edge of seat forward and pull seat into place.
8) Attach elbow bolts to front seat hooks and hand tighten ¼-20 nut.
9) Insert short tongue of rear seat hook into seat plate as shown. Using screwdriver snap hook to frame as shown. (See fig. 2)
10) Tighten ¼-20 nuts on front seat hooks.

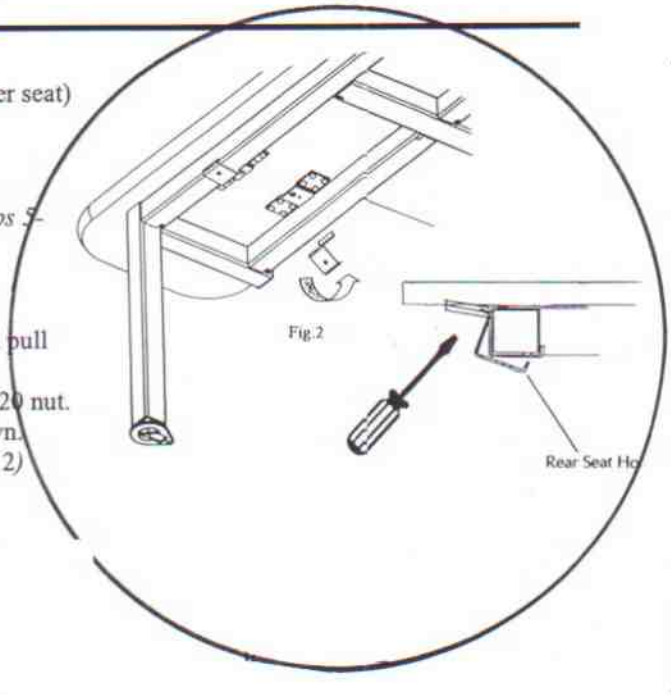

Fig.2

STEP #4FASTENING TABLE -TOPS

1) Locate and mark centerlines on the bottom surface of the tabletop. (see fig. 3)
2) Align your centerlines on tabletop with joint of frame halves. (see fig. 4)
3) Secure the tabletop using #10 x 1" pan head sheet metal screws.

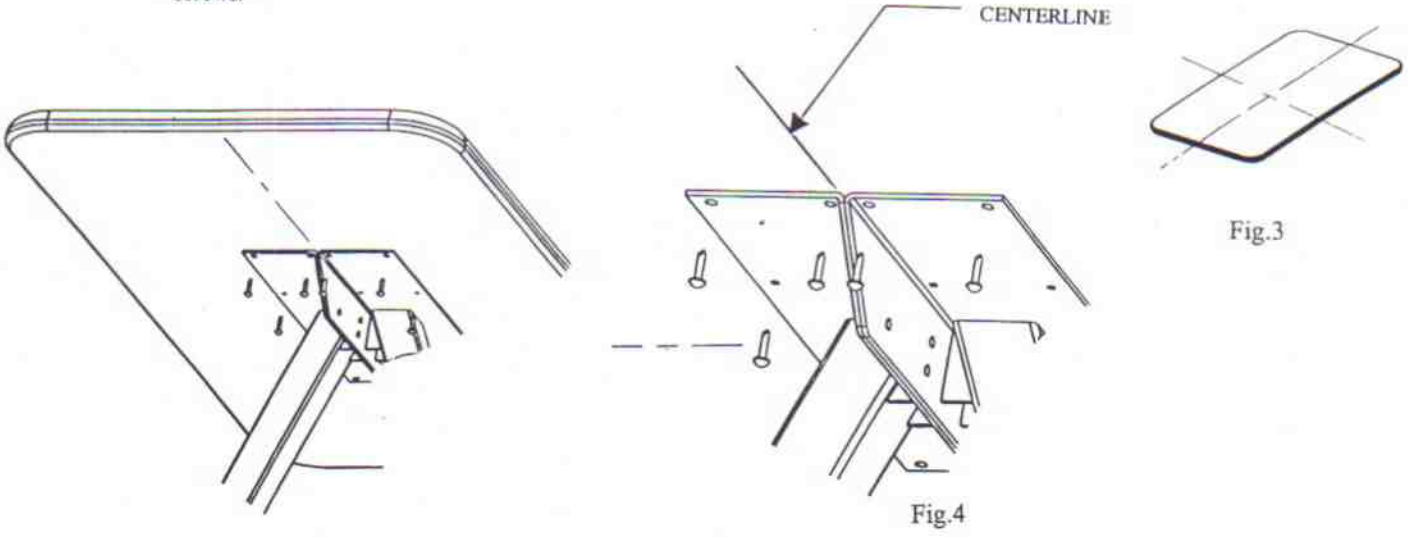

Fig.3

Fig.4

STEP #5: POSITIONING AND LEVELING

1) Confirm location of frames with floor plan.
2) Level booths by adjusting thread-in glides.
3) Fasten each glide to the floor using the floor anchors and #10 x 1" pan head sheet metal screws.

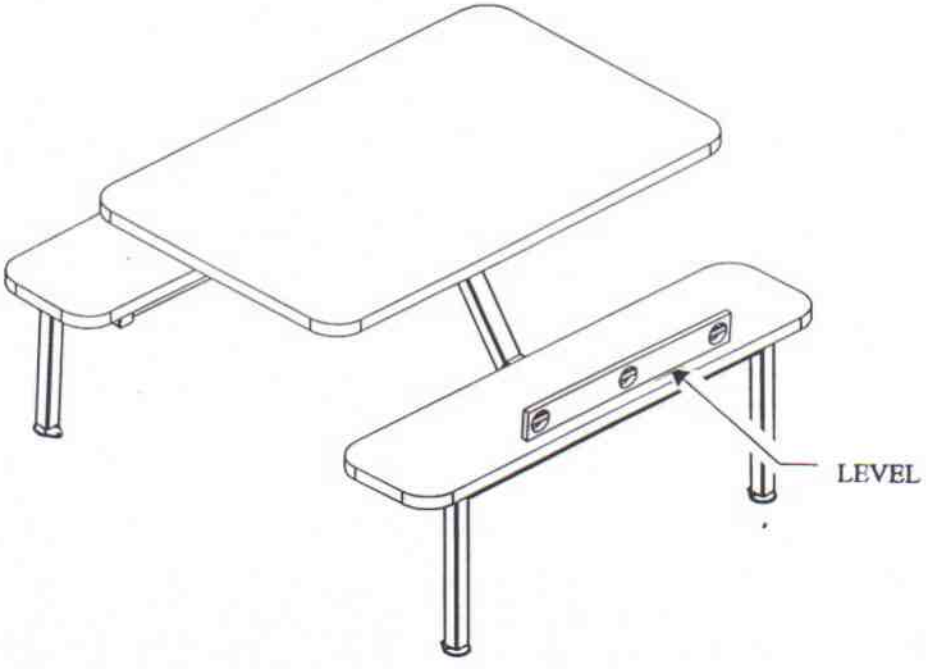

Note *Frames must be anchored to the floor to maintain stability and prevent personal injury.*

STEP #6:FASTENING GLIDES TO FLOOR

1) Rotate glides so that the mounting hole is pointing towards the center of the booth.
2) With a pencil/pen, mark the hole location on the floor using the hole in the glides.
3) Turn the glide away 90 degrees from its current position to expose the mark on the floor.
4) Using a hammer drill and a ¼" masonry bit, drill a 1 ¼, deep hole on the pencil mark.
5) Place a plastic anchor in the hole, rotate the glide back and align the holes.
6) Insert a #10x1.00" screw through glide and secure to floor.

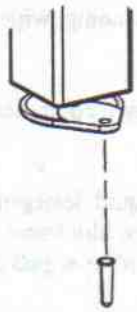

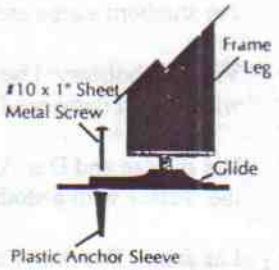

STEP #7:CARE

1) Clean furniture and protect until ready for use

CARE & MAINTENANCE:

Periodic maintenance is necessary to ensure long term durability and customer satisfaction. Buyers must therefore advise end user of the following:

To prevent personal injury, furniture must be inspected regularly for loose screws, glided and casters, cracked or broken welds, cracked laminate, wood splinters and general instability. Furniture that is damaged or appears to be unstable must be immediately removed from service and replaced or repaired using only factory-authorized parts and methods. Contact Plymold Customer Service for assistance and further instructions.

- Wood Finish/Environ: Coat wood with a hard paste wax every three to four months during the first year of use. After the first year, application can be less frequent. To clean, use liquid cleaner-wax polish combination. Do not use abrasive household solvents. Water spills on the surface should be wiped off immediately.
- Metal Finish: Wipe with a damp cloth. To remove dirt, brush the surface with a soft bristled dry brush. For stubborn stains and grease marks, use soap and water.
- Vinyl Upholstery: Use a liquid detergent suitable for cleaning vinyl. After cleaning, wipe the surface with a cloth dampened with warm water.
- Vinyl Edge and Dur-A-Edge: Use a liquid detergent suitable for cleaning vinyl. After cleaning, wipe the surface with a cloth dampened with warm water.
- Laminate: To remove stains, wipe surface with a damp cloth using soap or liquid detergent. Remove stubborn stains with a damp paste of baking soda. Leave on for a minute, then blot away. Abrasive cleaners should not be used. Acid based products spilled on the surface should be wiped off immediately, then rinsed.

PRODUCT WARRANTY:

Plymold warrants all products manufactured and/or marketed by Plymold to be free from defects in material and workmanship under normal usage and service for one (1) year from date of purchase unless extended warranties have been established for specific products. The customer assumes responsibility for normal wear and tear.

This Warranty Agreement excludes all products or component parts that, in the opinion of Plymold, have been subjected to negligent use, misuse, alteration, accident or improper installation. Plymold reserves the right to make design changes, improve design of change specifications at any time without any contingent obligation to owners of products previously sold.

Plymold shall not be held responsible by customer or potential customers for failure to perform any of the obligations of this Warranty Agreement if such failures are the result of circumstances of Force Majeure such as, but not limited to floods, earthquakes, transportation strikes, labor disputes with any outside suppliers, or any other conditions beyond the control of Plymold.

Plymold

Your source for furnishing solutions

615 Centennial Drive Kenyon, MN. 55946
Phone 507-789-5111, 800-PLYMOLD (759-6653) Fax: 507-789-8315
Email: seating@plymold.com www.plymold.com